TATRAFAN ENVIRO®
FROM WASTE TO VALUE

CYLINDRICAL CORE

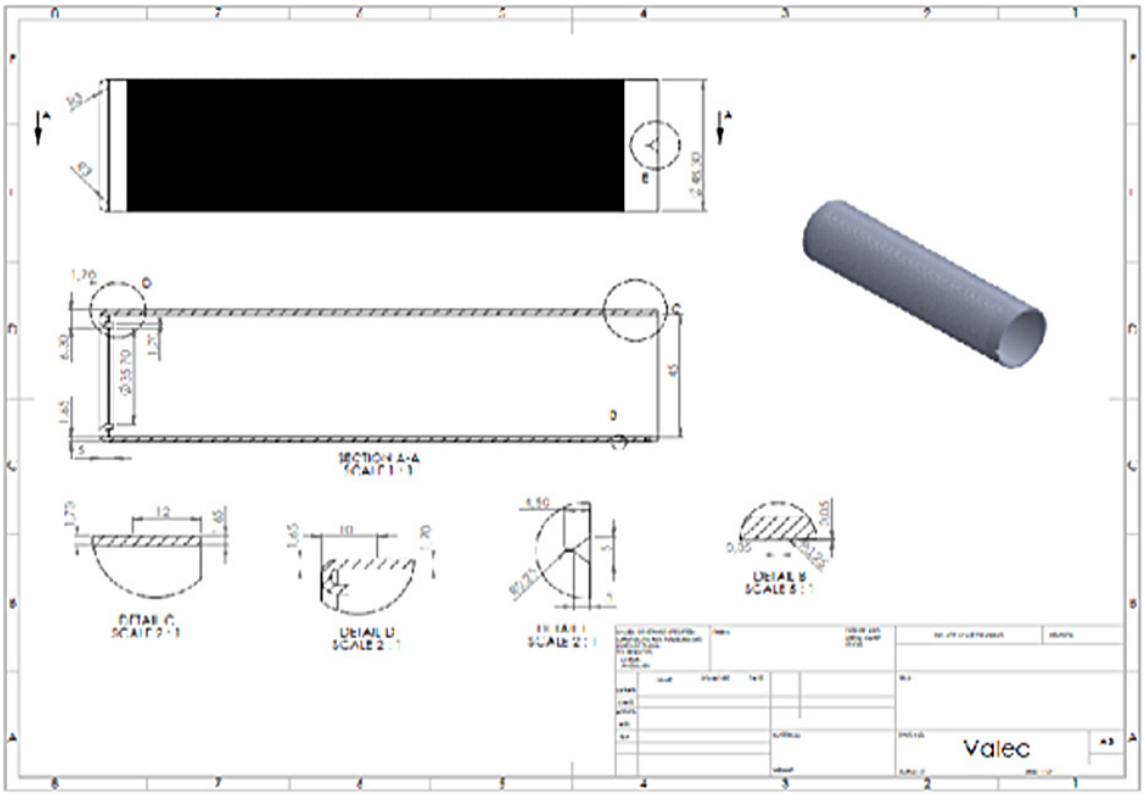

enviro.tatrafan.com

TATRAFAN, s.r.o.
Štúrova 101
059 21 Svit
Slovakia
tel.: +421 52 715 2685
fax: +421 52 715 7685
mail: milan.semancik@tatrafan.com

Edition: May 2017